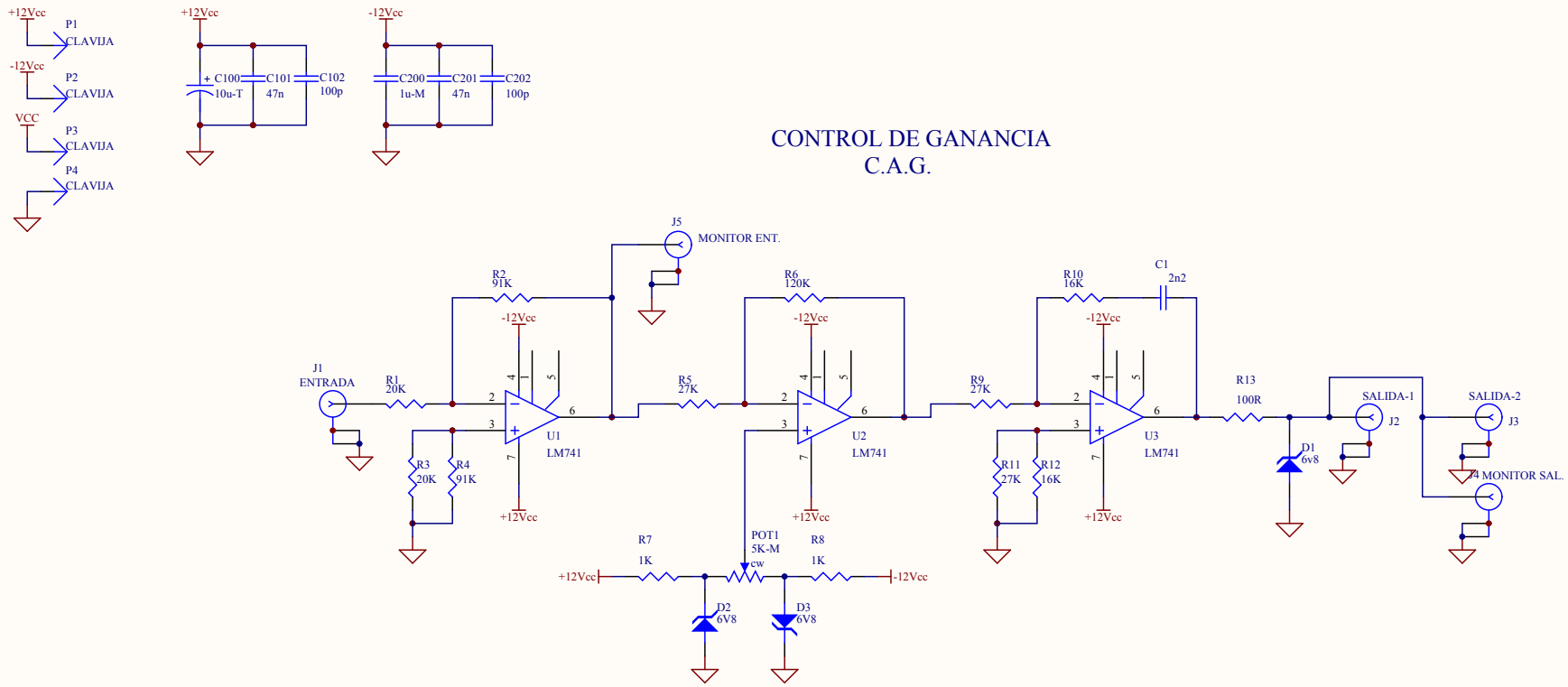


| Title | | |
|---|---|---|
| Size B | Number | Revision |
| Date: 08/04/2012 | Sheet of | |
| File: D:\LECM\..\AMPCAG01.SCH | Drawn By: | |